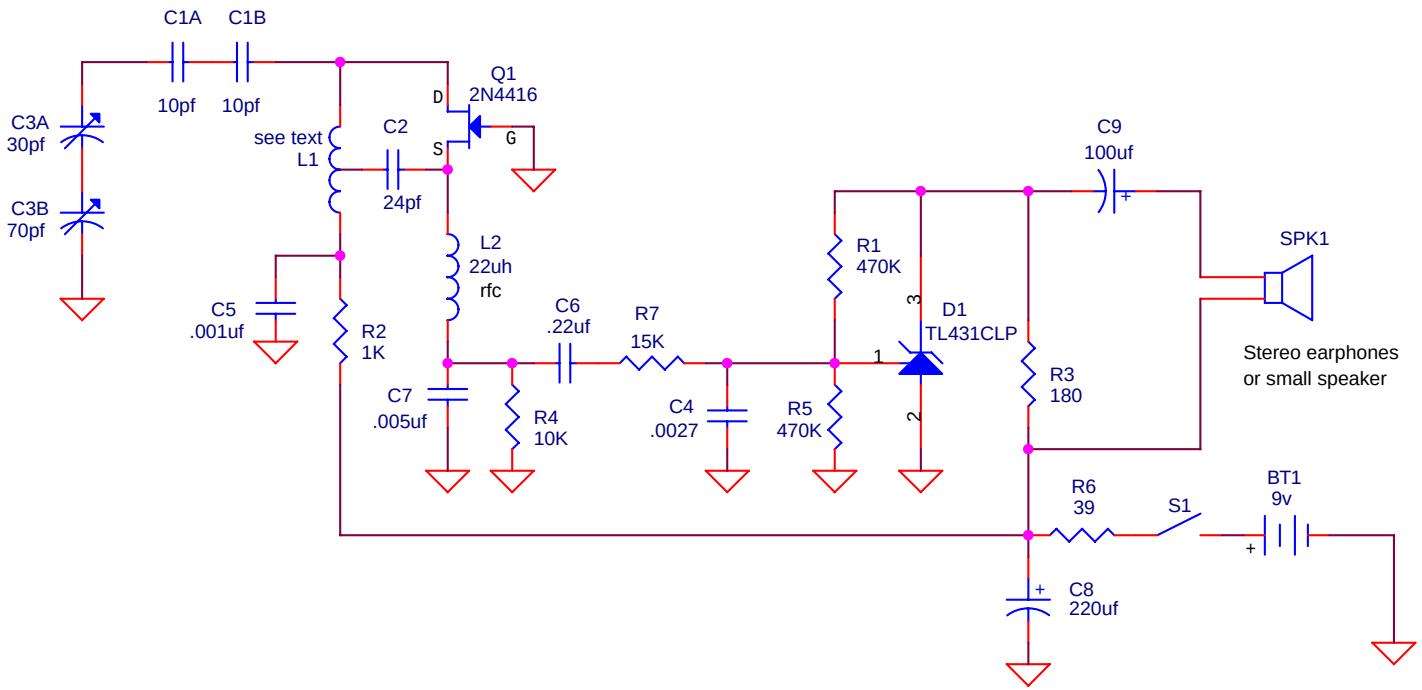

L1:
Wind 6 turns of solid wire on a pen or pencil that is just under 1/2 inch in diameter. Remove the wire from the pencil and spread the winding to make a length of 3/4 inch. Solder C2 somewhere near the middle of the coil.

TL431 / LM431
Bottom View

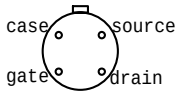

2N4416 Bottom View
The case lead should be grounded.

Title	Simple FM Radio with improved audio gain	
Size A	Document Number SFM1	Rev 2.0
Date: Tuesday, December 21, 2004	Sheet 1 of 1	